SHIMANO

ULTEGRA S A-RB

ULT-4000FB

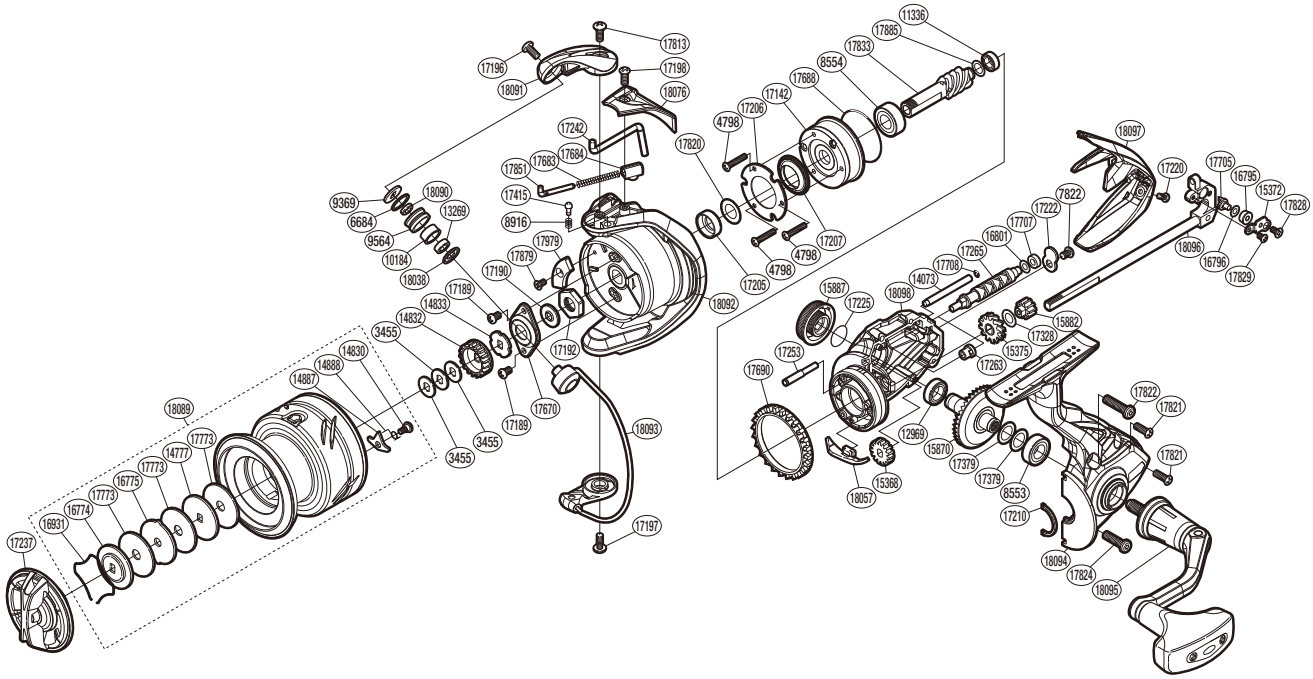

(51SF03H040X)

Please note that the number of adjusting washers may not be the same as shown in the exploded views. (Adjustment will vary with each individual product.)

Part No.	Description	Part No.	Description	Part No.	Description
RD 3455	Spool Washer	RD16801	Washer	RD17707	Worm Bushing
RD 4798	Screw	RD16931	Drag Washers Retainer	RD17708	O Ring
RD 6684	Line Roller Spacer	RD17142	Roller Clutch Assembly	RD17773	Drag Washer
RD 7822	Screw	RD17189	Screw	RD17813	Screw
RD 8553	Ball Bearing	RD17190	Bearing Water Proof	RD17820	Washer
RD 8554	Ball Bearing	RD17192	Rotor Nut	RD17821	Screw
RD 8916	Click Spring	RD17196	Screw	RD17822	Screw
RD 9369	Washer	RD17197	Screw	RD17824	Screw
RD 9564	Line Roller	RD17198	Screw	RD17828	Screw
RD10184	Line Roller Bushing	RD17205	Rotor Ring	RD17829	Screw
RD11336	Ball Bearing	RD17206	Roller Clutch Reinforce	RD17833	Pinion Gear
RD12969	Ball Bearing	RD17207	Roller Clutch Water Proof	RD17851	Bail Spring Guide
RD13269	Ball Bearing	RD17210	Flange Water Proof	RD17879	Screw
RD14073	Oscillating Guide	RD17220	Screw	RD17885	Washer
RD14777	Key Washer	RD17222	Worm Shaft Retainer	RD17979	Counter Weight A
RD14830	Screw	RD17225	O Ring	RD18038	Line Roller Support (B)
RD14832	Spool Support A	RD17237	Drag Knob	RD18057	Bail Trip Strike
RD14833	Spool Support B	RD17242	Bail Trip Lever	RD18076	Bail Spring Cover
RD14887	Drag Click	RD17253	Idle Gear B Shaft	RD18089	Spool Assembly
RD14888	Click Spring	RD17263	Worm Bushing (Front)	RD18090	Bearing Spacer
RD15368	Idle Gear	RD17265	Worm Shaft	RD18091	Bail Arm
RD15372	Oscillating Pawl Cover	RD17328	Washer	RD18092	Rotor
RD15375	Idle Gear B (Large)	RD17379	Washer	RD18093	Bail Assembly
RD15870	Drive Gear	RD17415	Click Pin	RD18094	Side Cover
RD15882	Idle Gear B (Small)	RD17670	Rotor Nut Lock Plate	RD18095	Handle Assembly
RD15887	Handle Screw Cap	RD17683	Bail Spring	RD18096	Main Shaft Assembly
RD16774	Key Washer	RD17684	Bail Spring Seat	RD18097	Rear Protector
RD16775	Eared Washer	RD17688	O Ring	RD18098	Body
RD16795	Oscillating Slider Bushing	RD17690	Friction Ring		
RD16796	Spacer	RD17705	Oscillating Pawl	RD18054	Anti Line Slip Sticker