SHIMANO

BAITRUNNER

BTR-12000OC

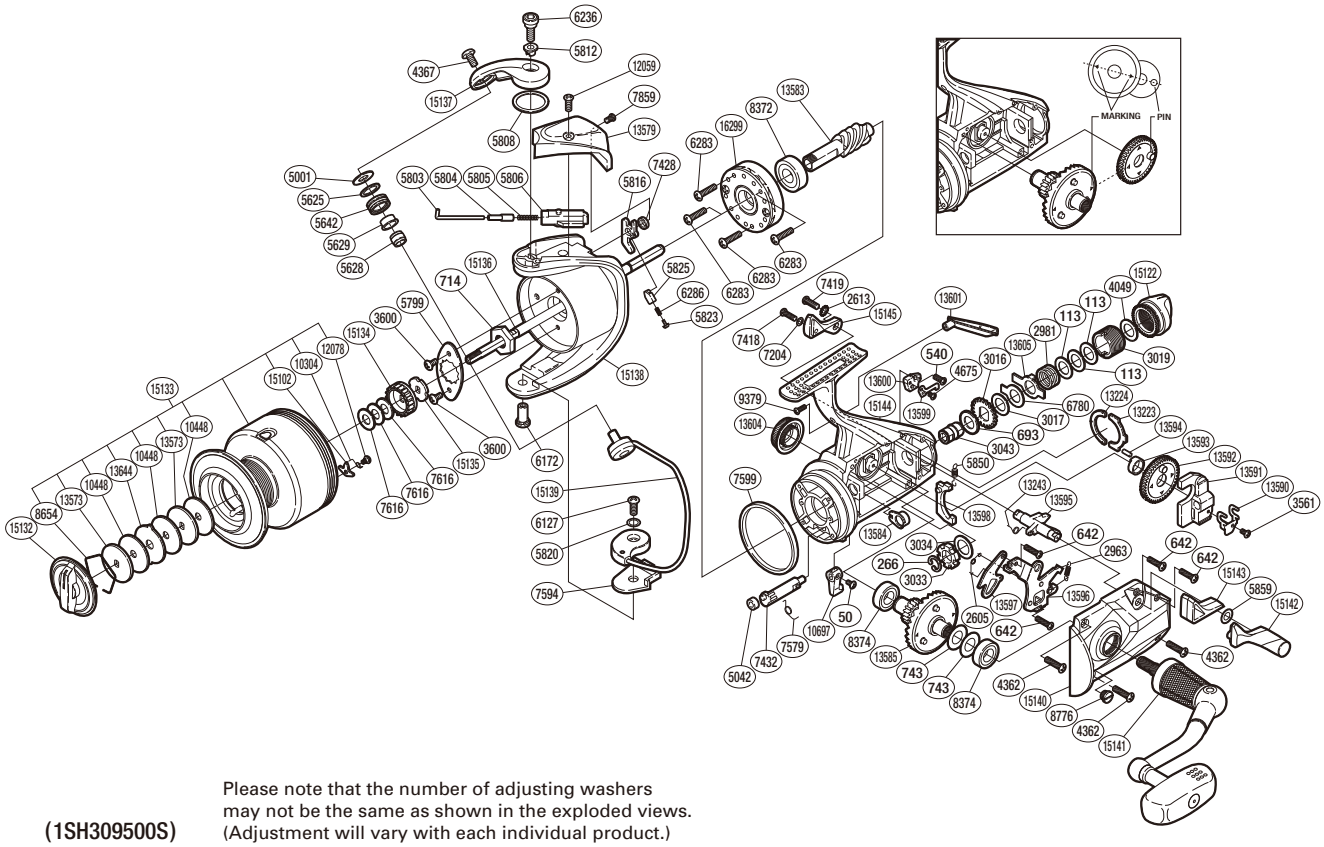

Please note that the number of adjusting washers may not be the same as shown in the exploded views. (Adjustment will vary with each individual product.)

(1SH309500S)

Part No.	Description	Part No.	Description	Part No.	Description
RD 0050	Screw	RD 5816	Bail Trip Lever	RD13579	Bail Spring Cover
RD 0113	Washer	RD 5820	Spacer	RD13583	Pinion Gear
RD 0266	C Lock	RD 5823	Lever Spring Guide A	RD13584	Pinion Gear Bushing
RD 0540	Screw	RD 5825	Lever Spring Guide B	RD13585	Drive Gear
RD 0642	Screw	RD 5850	BaitRunner Pawl Spring	RD13590	Oscillating Slider Retainer
RD 0693	Free Spool Tension Washer	RD 5859	Spacer	RD13591	Oscillating Slider
RD 0714	Rotor Nut	RD 6127	Screw	RD13592	Oscillating Gear
RD 0743	Washer	RD 6172	Bail Hold Support Shaft	RD13593	Oscillating Gear Bushing
RD 2605	Clutch Pawl Spring	RD 6236	Screw	RD13594	E Pin
RD 2963	BaitRunner Click Spring	RD 6283	Screw	RD13595	BaitRunner Lever Shaft
RD 2981	Free Spool Tension Spring	RD 6286	Bail Trip Lever Spring	RD13596	Clutch Plate Assembly
RD 3016	Click Gear	RD 6780	Single Eared Washer	RD13597	Clutch Pawl
RD 3017	Free Spool Tension Washer	RD 7204	Lock Washer	RD13598	BaitRunner Pawl
RD 3019	Free Spool Tension Screw	RD 7418	Screw	RD13599	Dial Click
RD 3033	BaitRunner Ratchet	RD 7419	Screw	RD13600	BaitRunner Pawl Guide
RD 3034	Spacer	RD 7428	Bail Trip Lever Washer	RD13601	Body I.D. Plate
RD 3043	Free Spool Tension Shaft	RD 7432	Anti-Reverse Cam	RD13604	Handle Screw Cap
RD 3561	Screw	RD 7579	Anti-Reverse Cam Spring	RD13605	Eared Washer
RD 3600	Screw	RD 7594	Bail Hold Support Spacer	RD13644	Eared Washer
RD 4049	Washer	RD 7599	Friction Ring	RD15102	Drag Click
RD 4362	Screw	RD 7616	Spool Washer	RD15122	BaitRunner Tension Dial
RD 4367	Screw	RD 7859	Screw	RD15132	Drag Knob
RD 4675	Screw	RD 8372	Ball Bearing	RD15133	Spool Assembly
RD 5001	Line Roller Washer	RD 8374	Ball Bearing	RD15134	Spool Support A
RD 5042	Anti-Reverse Cam Ring	RD 8654	Drag Washers Retainer	RD15135	Spool Support B
RD 5625	Line Roller Spacer	RD 8776	Oil Cap	RD15136	Main Shaft
RD 5628	Line Roller Collar	RD 9379	Screw	RD15137	Bail Arm
RD 5629	Line Roller Bushing	RD10304	Click Spring	RD15138	Rotor
RD 5642	Line Roller	RD10448	Drag Washer	RD15139	Bail Assembly
RD 5799	Rotor Nut Retainer	RD10697	Anti-Reverse Lever	RD15140	Side Cover
RD 5803	Bail Spring Guide A	RD12059	Screw	RD15141	Handle Assembly
RD 5804	Spring Guide A Support	RD12078	Screw	RD15142	BaitRunner Lever Arm L
RD 5805	Bail Spring	RD13223	Dial Retainer	RD15143	BaitRunner Lever Bridge
RD 5806	Bail Spring Guide B	RD13224	Dial Retainer B	RD15144	Body
RD 5808	Washer	RD13243	Clutch Spring	RD15145	BaitRunner Lever Arm R
RD 5812	Screw Collar	RD13573	Key Washer	RD16299	Roller Clutch Assembly