Front Wheel

WH-RS770-C30-TL-F12

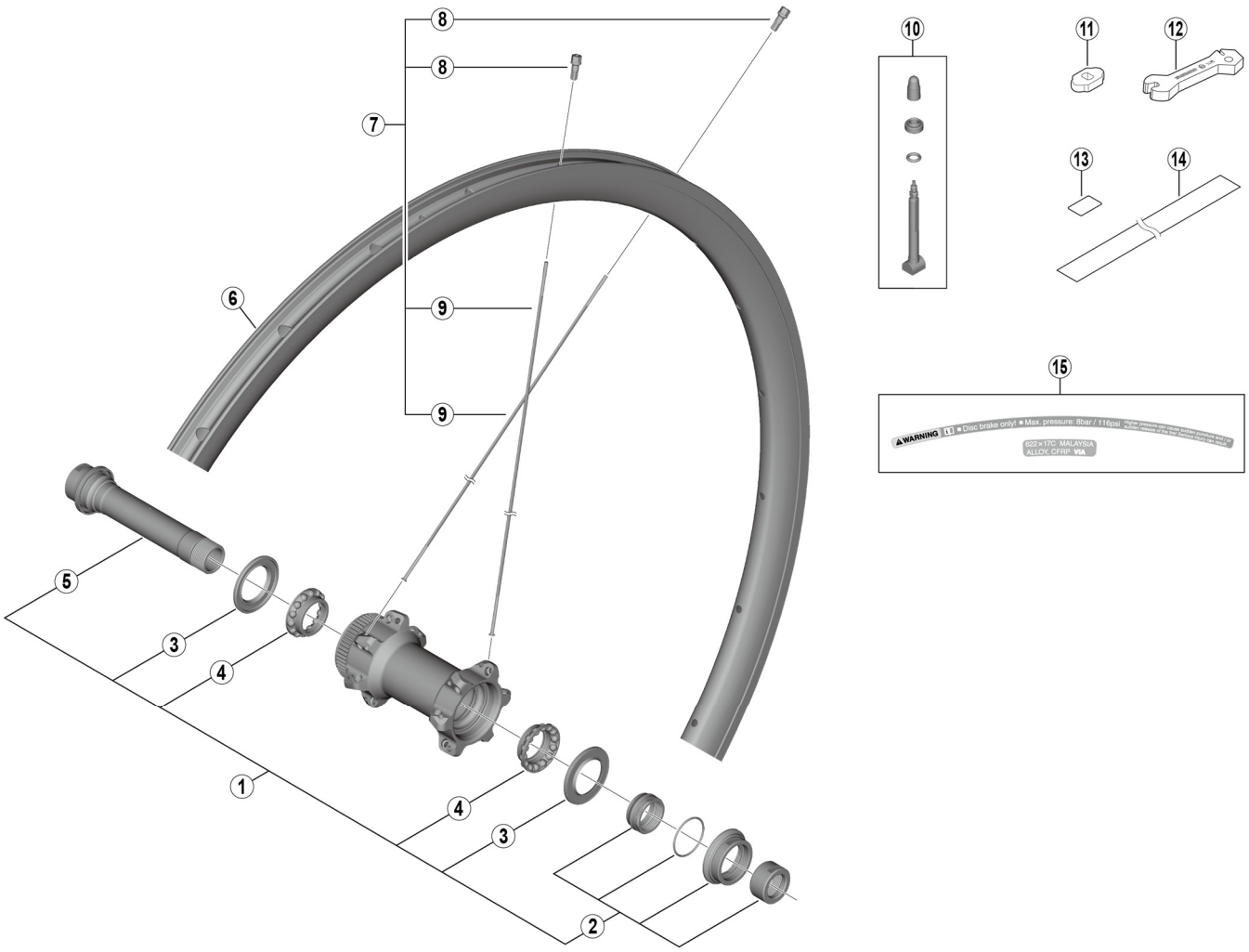

• Over Lock Nut Dimension: 100 mm (3-15/16")

ITEM NO.	SHIMANO CODE NO.	DESCRIPTION	INTERCHANGE-ABILITY (HB-RS770)		
1	**Y2BW98010**	Complete Hub Axle	A		
2	**Y2BW98020**	Right Hand Lock Nut Unit	A		
3	**Y26D10000**	Seal Ring	A		
4	**Y0AY98030**	Ball Retainer (5/32")	A		
5	**Y2BW98030**	Hub Axle Unit	A		
6	**EWHRIMZ2F5P**	Rim {24H}			
* 7	**EWHSPOKEY2739**	Spoke Unit {Spoke (289.5 mm x 24 pcs.) / Nipple (24 pcs.)}			
8	**Y4SYN1000**	Nipple			
9	**Y0D4S1000**	Spoke (289.5 mm)			
10	**Y0D498010**	Valve Unit			
11	**Y4RJ10000**	Valve Tool			
12	**Y4SY11000**	Nipple Wrench 3.75			
13	**Y0AN98020**	SUS Tape (24 pcs.)			
14	**Y0AN70000**	Tubeless Tape			
15	**Y0D498020**	Rim Sticker Unit			

A: Same parts.

B: Parts are usable, but differ in materials, appearance, finish, size, etc.

Absence of mark indicates non-interchangeability.

Jan.-2019-4238B

© Shimano Inc. I

Specifications are subject to change without notice.

SHIMANO