DURA-ACE Front Wheel

WH-R9270-C36-TU-F

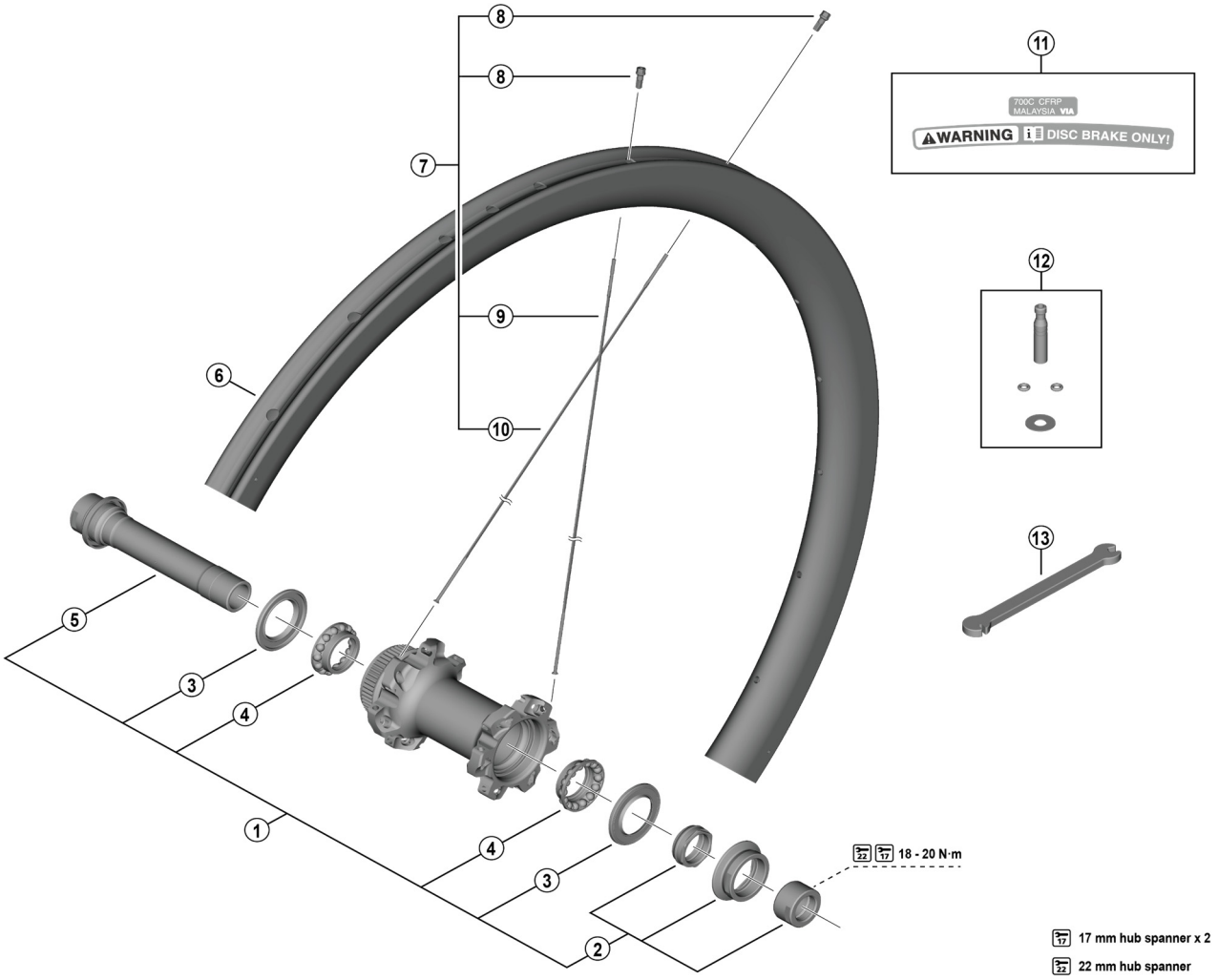

• O.L.D. 100 mm

ITEM NO.	SHIMANO CODE NO.	DESCRIPTION
* 1	**Y0MK98050**	Complete hub axle
* 2	**Y0MK98060**	Right-hand lock nut unit
3	**Y0MK09000**	Seal ring
4	**Y0AY98030**	Ball retainer (5/32")
5	**Y0MK98030**	Hub axle unit
6	**EWHRIMZ2F66**	Rim {24H}
7	**EWHSPOKEY274P**	Spoke unit {spoke (285 mm x 12 pcs. / 282 mm x 12 pcs.) / nipple (24 pcs.)}
8	**Y0MKN1000**	Small nipple 14G
9	**Y0MSS1200**	Right-hand spoke (285 mm)
10	**Y0MSS1100**	Left-hand spoke (282 mm)
11	**Y0MK98040**	Rim sticker unit
12	**Y07G98010**	Valve extension unit
13	**Y0MK14000**	TL-WHR92 Nipple wrench 3.4

Sep.-2023-4828B

© Shimano Inc. I

Specifications are subject to change without notice.
Torque information is listed.

SHIMANO