DURA-ACE Front Wheel

WH-R9200-C36-TU-F

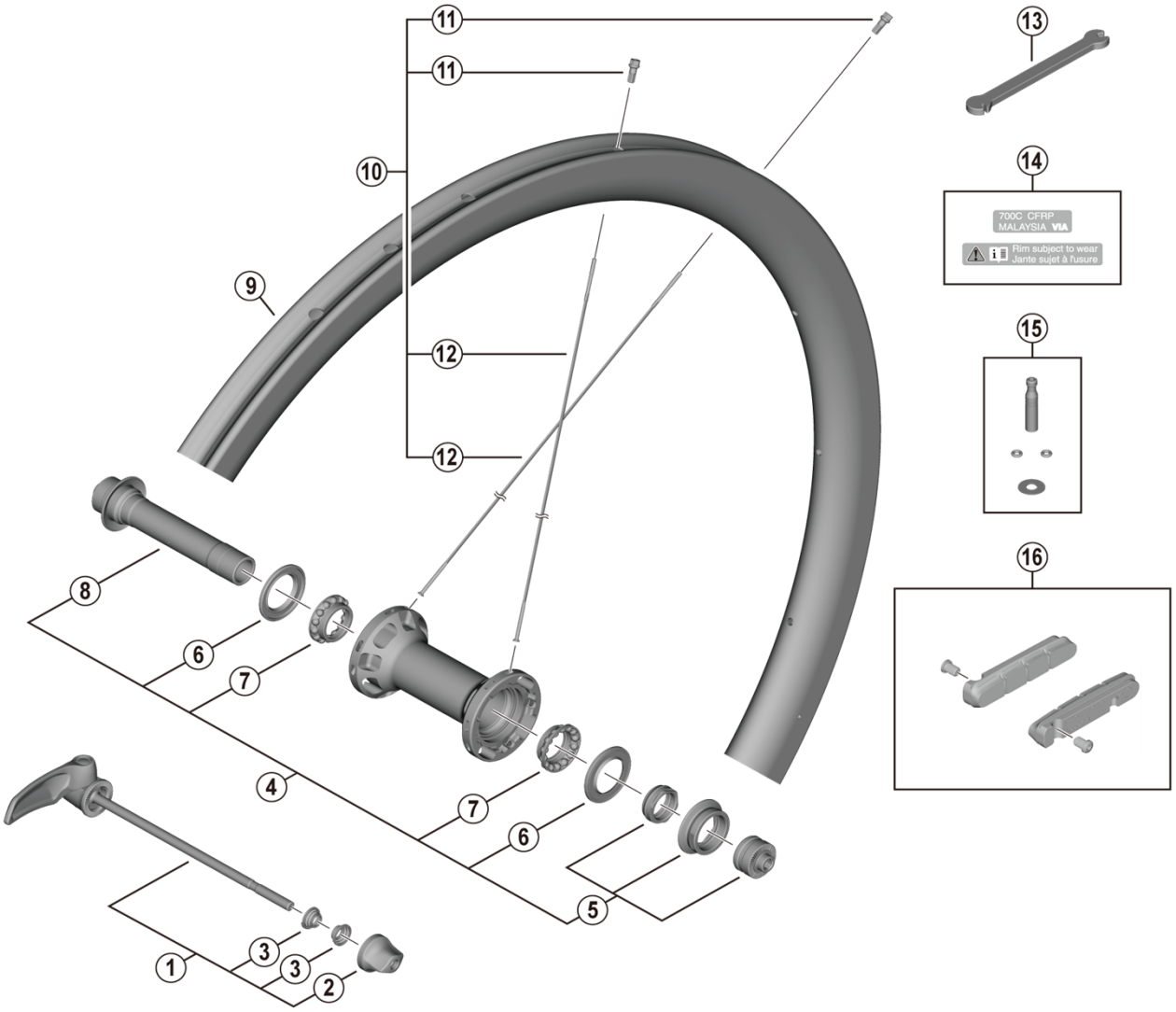

• Over Lock Nut Dimension: 100 mm

ITEM NO.	SHIMANO CODE NO.	DESCRIPTION
1	**Y0M498010**	Complete quick release 133 mm
2	**Y0M498020**	Quick release nut
3	**Y23321010**	Volute spring
4	**Y0M498030**	Complete hub axle
5	**Y0M498040**	Right hand lock nut unit
6	**Y0MK09000**	Seal ring
7	**Y0AY98030**	Ball retainer (5/32")
8	**Y0M498050**	Hub axle unit
9	**-**	Rim {16H}
10	**-**	Spoke unit {spoke (275 mm x 16 pcs.) / nipple (16 pcs.)}
11	**Y0MKN1000**	Small nipple 14G
12	**Y0M7S1000**	Spoke (275 mm)
13	**Y0MK14000**	TL-WHR92 Nipple wrench 3.4
14	**Y0M498060**	Rim sticker unit
15	**Y07G98010**	Valve extension unit
16	**Y8PP98060**	R55C4-A Brake shoes (-1 mm thinner shoe) and fixing screws (pair) for carbon rim

Sep.-2021-4820

© Shimano Inc. I

Specifications are subject to change without notice.

SHIMANO