DEORE XT Rear Wheel (8/9/10/MTB 11-speed)

WH-M8000-TL-R12-B-29 For Disc Brake
SM-AX76-B

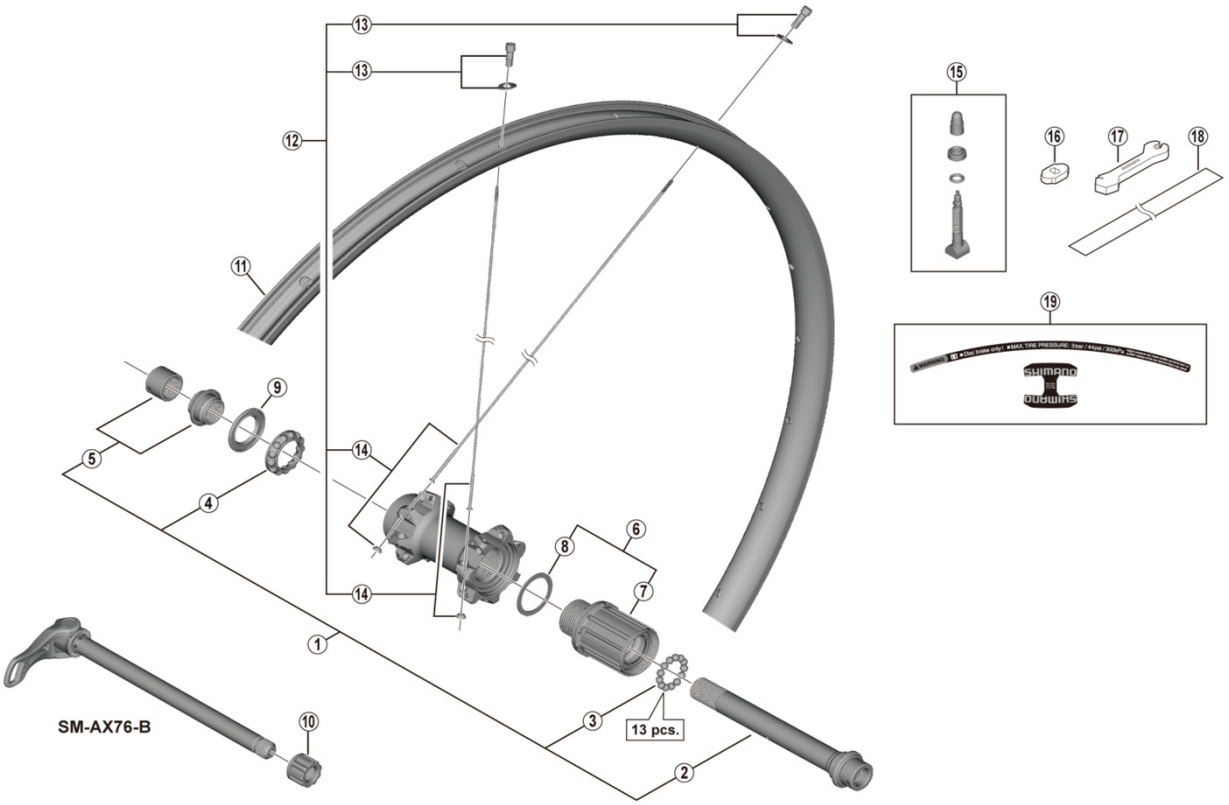

WH-M8000-TL-R12-29

• Over Lock Nut Dimension: 148 mm (5-13/16")

ITEM NO.	SHIMANO CODE NO.	DESCRIPTION	INTERCHANGE-ABILITY		
1	**Y39E98010**	Complete Hub Axle			
2	**Y39E98020**	Hub Axle Unit			
3	**Y00091210**	Steel Ball (3/16") 20 pcs.	A		
4	**Y3D498050**	Ball Retainer (3/16")	A		
5	**Y3TH98030**	Left Hand Lock Nut (M15) & Cone (M15) w/Dust Cover	A		
6	**Y39Y98010**	Complete Freewheel Body	A		
7	**Y39Y98020**	Freewheel Body Unit	A		
8	**Y3CZ12000**	Spacer for Inner	A		
9	**Y26D10000**	Seal Ring	A		
10	**Y27Y02000**	Fixing Nut (M12)	A		
11	**EWHRIMZ2F4X**	Rim {28H}	A		
12	**-**	Spoke Unit {Spoke (301 mm x 28 pcs.) / Spherical Washer (28 pcs.) / Nipple (28 pcs.) / Rim Washer (28 pcs.)}			
13	**Y03X98010**	Nipple & Rim Washer	A		
14	**Y0CC98020**	Spoke (301 mm) w/Spherical Washer	B		
15	**Y4RJ98020**	Valve Unit	A		
16	**Y4RJ10000**	Valve Tool	A		
17	**Y4EF28000**	Nipple Wrench 4.0	A		
18	**Y47V00010**	Tubeless Tape	A		
19	**Y03P98020**	Rim Sticker Unit	A		

A: Same parts.

B: Parts are usable, but differ in materials, appearance, finish, size, etc.

Absence of mark indicates non-interchangeability.

Oct.-2018-4263A

© Shimano Inc. I

Specifications are subject to change without notice.

SHIMANO