GRX Rear Derailleur

RD-RX817 (11-speed)

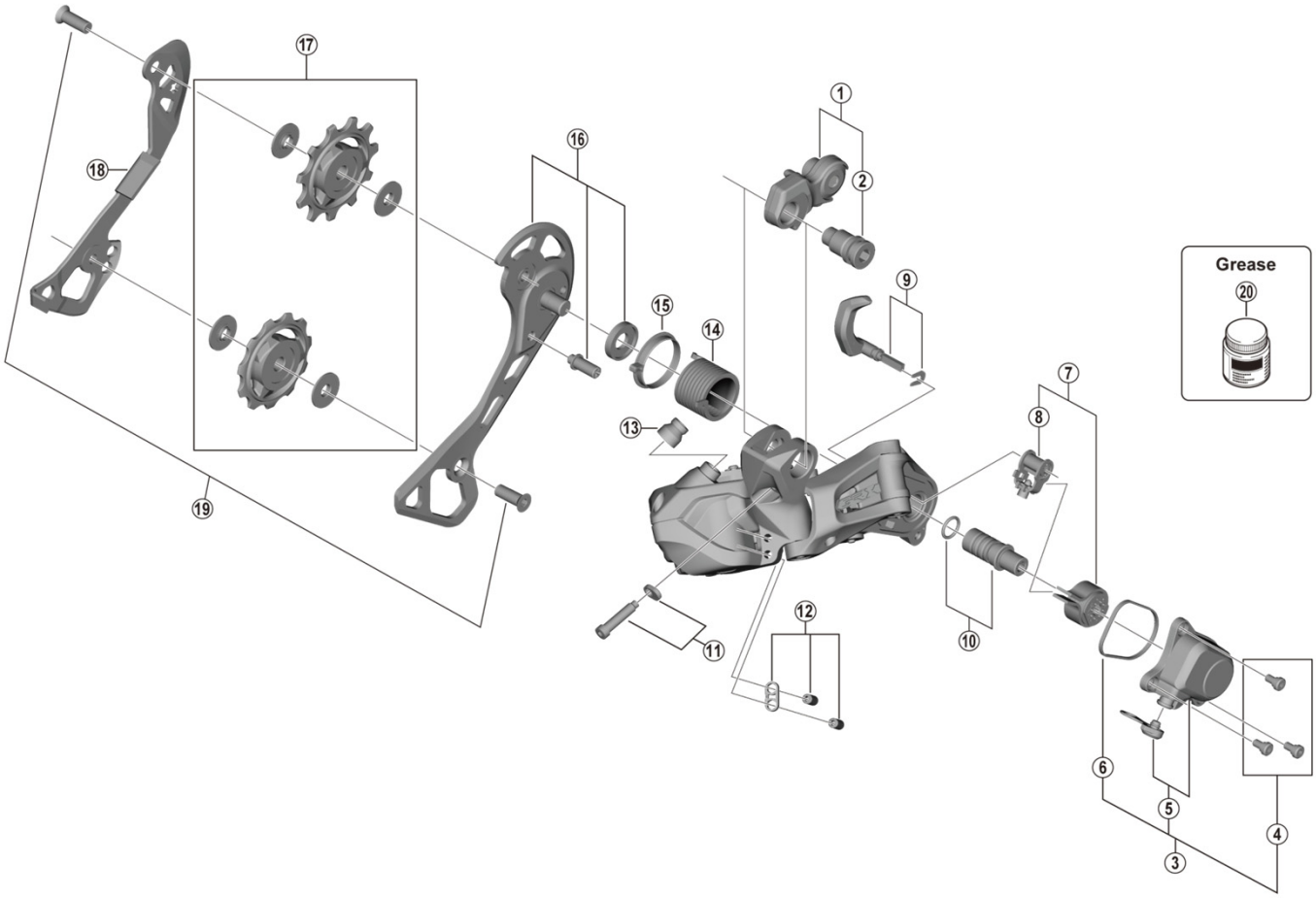

ITEM NO.	SHIMANO CODE NO.	DESCRIPTION
1	**Y3FC98010**	Bracket Axle Unit (for normal type)
2	**Y3E958000**	B-Axle 2 (for Direct Mount type)
3	**Y3HT98020**	P-Cover Unit
4	**Y5Y198070**	P-Cover Screw Set (3 pcs.)
5	**Y3HT98030**	P-Cover & Cap
6	**Y5ZN00031**	P-Cover Packing
7	**Y3HT98040**	Stabilizer Unit
8	**Y3HT98050**	Cam Unit
9	**Y3HT98060**	Switch Lever Unit & Fixing Plate
10	**Y3HT98070**	P-Axle & O-Ring
* 11	**Y3E998040**	End Adjusting Screw & Plate
12	**Y5ZN98060**	Stroke Adjusting Screws & Plate
13	**Y5PU130Y0**	Boot Cover
14	**Y5PU13100**	P-Tension Spring
15	**Y5PU130T0**	P-Seal Ring
16	**Y3HT98080**	Outer Plate Assembly
17	**Y3HT98010**	Tension & Guide Pulley Set
18	**Y5ZN00080**	Inner Plate
19	**Y3HR98050**	Pulley Screw (2 pcs.)
20	**Y04121000**	New Grease for Stabilizer (Net. 50g)

Feb.-2020-4592A

© Shimano Inc. I

Specifications are subject to change without notice.

SHIMANO