DURA-ACE Front Derailleur

FD-R9150 (2x11-speed)

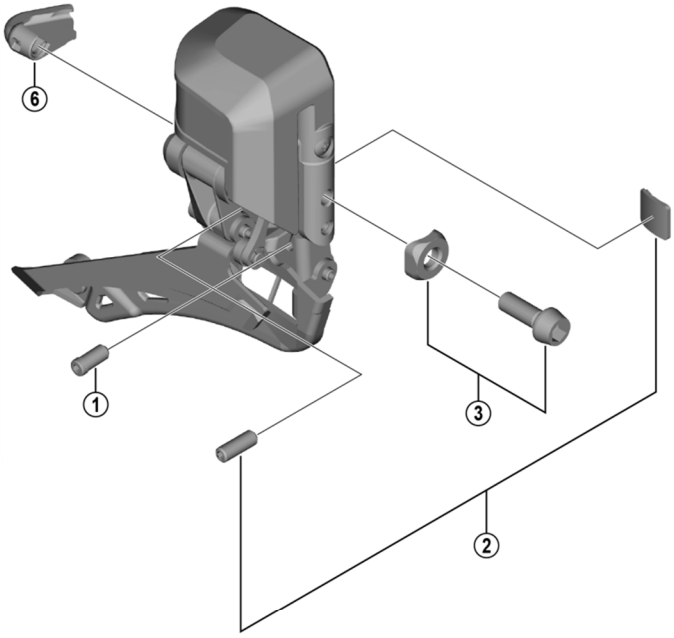

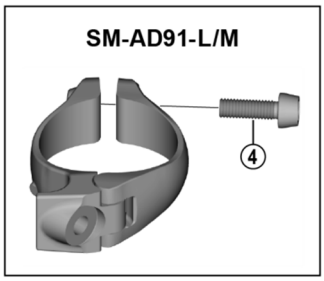

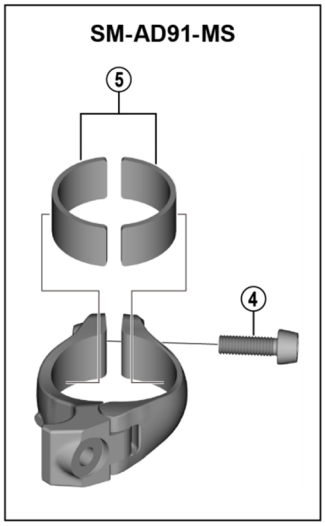

ITEM NO.	SHIMANO CODE NO.	DESCRIPTION
1	**Y5P6001D0**	Adjust Bolt
2	**Y5ZW98010**	Support Bolt & Plate
3	**Y5ZW98020**	Clamp Bolt & Radius Washer
4	**Y5ZS39000**	Clamp Bolt (M5 x 17)
5	**Y5P198030**	Clamp Band Adapter Unit for S-size / Diameter 28.6 mm (1-1/8")
6	**Y5ZW00031**	Plug Cover

Jun.-2019-4063C

© Shimano Inc. I

Specifications are subject to change without notice.

SHIMANO